# Decoupling inductors

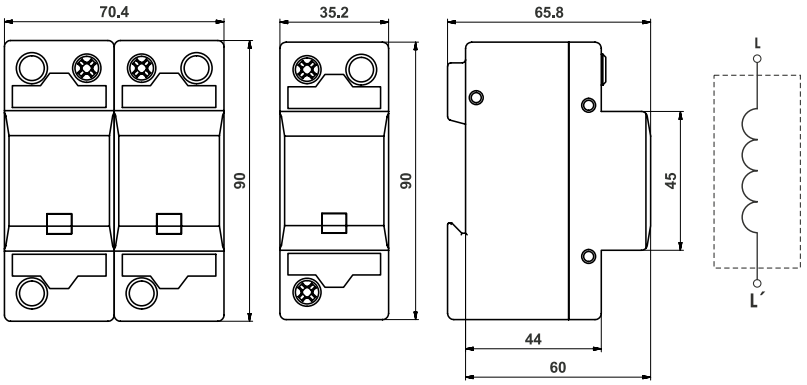


## PZH L63, PZH L63/15, PZH L80

Decoupling inductors are intended for rated load currents within the range of 63 and 80A. These inductors, sometimes also called decoupling impedance, ensure the energy coordination between the arresters type 1 and type 2 or the arresters type 2 and type 3 according to IEC 1024-1 and IEC EN 61643-11, especially in the places where there is no adequate distance between the arresters (e.g. when there are two successive arrester types placed in one switchboard). If the energy coordination of surge protection is not achieved, the lightning current impulse can damage some arrester type of the protection cascade. If there is at least 5m distance between two successive arrester types (in case of two successive arrester types in two different switchboards), this section impedance can be considered as adequate.

| TYPE | | PZH L63 | PZH L63/15 | PZH L80 |
|---|---|---|---|---|
| Nominal voltage | $U_N$ | 500 V AC | | |
| Rated load current | $I_L$ | 63 A | | 80 A |
| Inductance | L | 6 µH ± 10% | 15 µ H ± 10% | 4 µ H ± 10% |
| DC resistance | | < 0,01 Ω | | |
| Housing material | | Polyamid PA6, UL 94 V-0 | | |
| Protection type | | IP20 | | |
| Operating temperature range | J | -40 °C ... +70 °C | | |
| Cross-section of the connected conductors (at tightening moment of clamps 3 Nm) | | 16 mm² | | 25 mm² |
| Max. back-up fuse | | 63 A | | 80 A |
| Lifetime | | min. 100 000 h | | |
| Weight | | 360 g | 630 g | 360 g |
| Article number | | **77 30 404** | **77 30 405** | **77 30 406** |