Product: ISVH-SON16

Product code: 90268

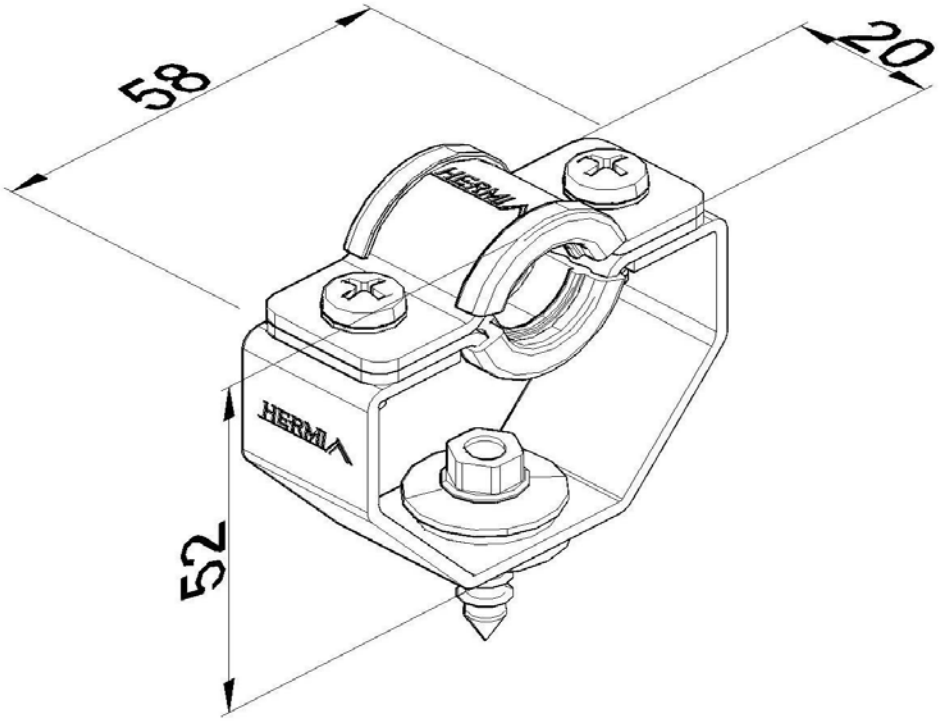

Standard:	EN IEC 62561-2:2018: Lightning Protection System Components (LPSC) - Part 2: Requirements for conductors and earth electrodes
Dimensions:	Length: 58 mm
	Width: 20 mm
	Height: 52 mm
	Weight: 0,09 kg
Material:	Stainless steel