Product: CH 1 conductor

Product code: 90100

Round conductor

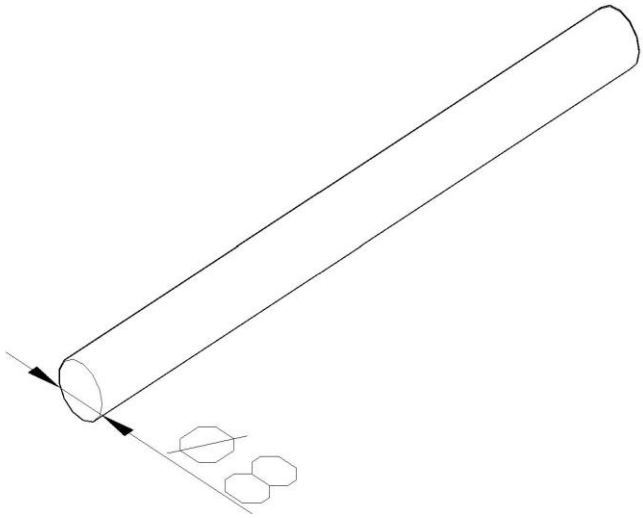

Standard:	EN IEC 62561-2:2018 : Lightning Protection System Components (LPSC) - Part 2: Requirements for conductors and earth electrodes
Dimensions:	Length: 40-80 m
	Dimension: ϕ8 mm
	Weight: 0,46 kg/m
Material:	Copper
Tensile strength:	200 N/mm2 - 450 N/mm2
Maximum electrical resistivity:	0,019 μΩm