Product: KON10 A

Product code: 700137

Pipe bonding clamp

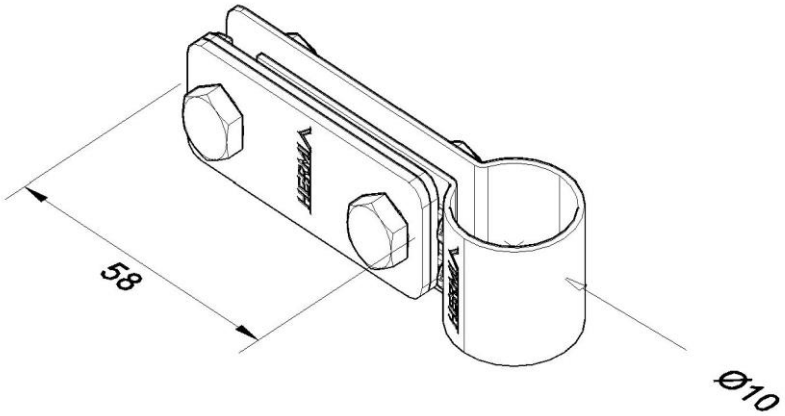

Standard:	EN 62561-4:2017 Lightning Protection System Components (LPSC) - Part 4: Requirements for conductor fasteners
Dimensions:	Clamp diameter: ϕ10(1/8") mm
	Conductor dimensions: P up to 30 mm
	Weight:
Material:	Copper