Product: KON08

Product code: 50117

Contact clamp for lightning conductor

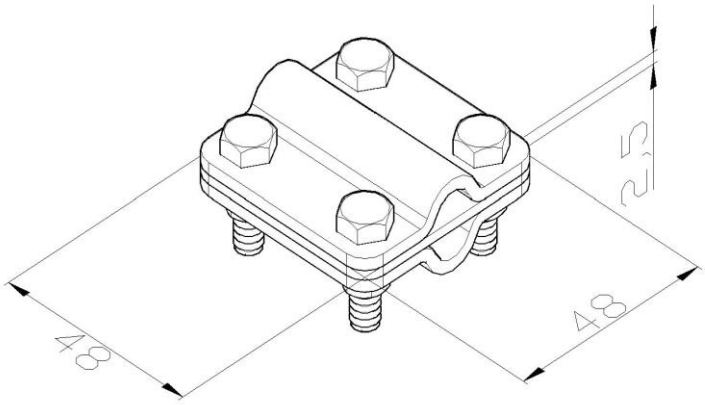

Standard:	EN 62561-1:2017: Lightning Protection System Components (LPSC) - Part 1: Requirements for connection components
Dimensions:	Length: 48 mm
	Width: 48 mm
	Height:
	Weight: 0,16 kg
	Conductor dimensions 1: ϕ8-10 mm
	Conductor dimensions 2: ϕ8-10 mm
Material:	acid-resistant stainless steel
Withstand lightning current class:	H