Product: SON16

Product code: 11629

Roof conductor fastener

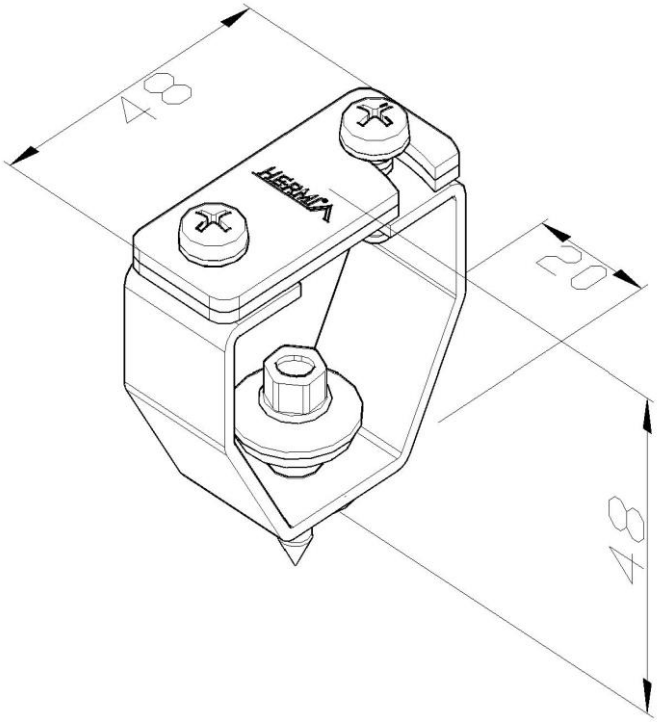

Standard:	EN 62561-4:2017: Lightning protection system components (LPSC) - Part 4: Requirements for conductor fastener
Dimensions:	Length: 48 mm
	Width: 20 mm
	Height: 48 mm
	Conductor diameter: P 30x3,5 mm
	Weight: 0,09 kg
Material:	Acid-resistant stainless steel