Product: SON13 A

Product code: 113230

Roof conductor fastener

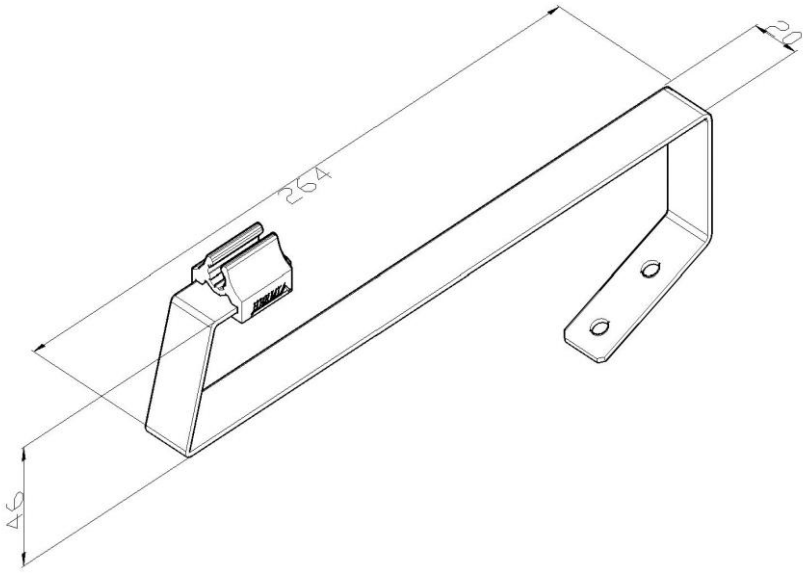

Standard:	EN 62561-4:2017: Lightning protection system components (LPSC) - Part 4: Requirements for conductor fastener
Dimensions:	Length: 264 mm
	Width: 20 mm
	Height: 46 mm
	Conductor diameter: ϕ10 mm
	Weight: 0,14 kg
Material:	Stainless steel - nylon