Product: PKL-RED 60/600/500

Product code: 88711366

Reduction element - right

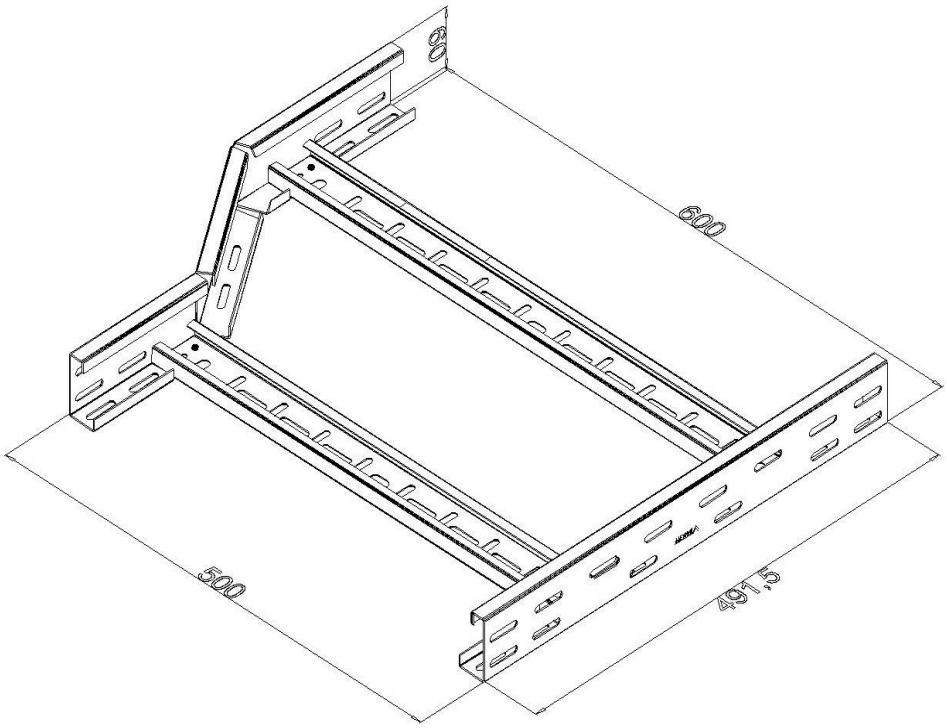

Standard:	EN 61537:2007 Cable management - Cable tray systems and cable ladder systems
Dimensions:	Length: 491,5 mm
	Width: Reduced width 600/500 mm
	Height: 60 mm
	Metal thickness: 1 mm
Weight:	
Material:	Powder coated galvanised steel in the colours according to the RAL scale
Contribution to fire:	Non-flame propagating system
Electrical characteristics:	Electrically conductive system
Electrical continuity:	Yes
Corrosion resistance:	Class 3
Temperature:	Min: -20°C; Max: +105°C