Product: NKP-DUL/P 500

Product code: 88709431

Hanging bracket

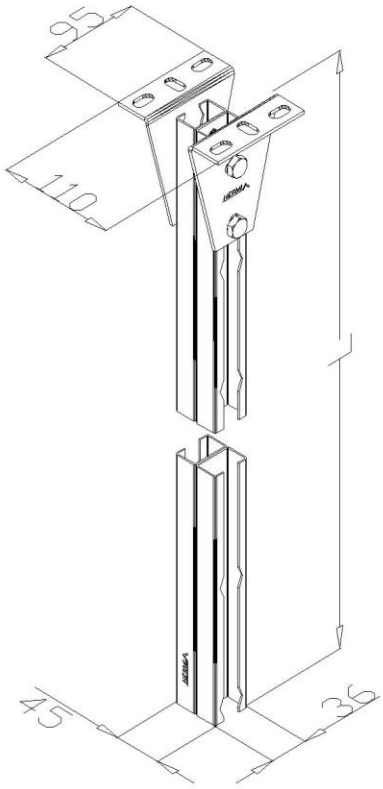

Standard:	EN 61537:2007 Cable management - Cable tray systems and cable ladder systems
Dimensions:	Length: 95 mm
	Width: 110 mm
	Height: 500 mm
	Metal thickness: 3 mm
Maximum bending moment:	0,25 kNm
Weight:	
Material:	Acid resistant stainless steel
Contribution to fire:	Non-flame propagating system
Electrical characteristics:	Electrically conductive system
Electrical continuity:	Yes
Corrosion resistance:	Class 9B
Temperature:	Min: -20°C; Max: +105°C